T29M-038-265I

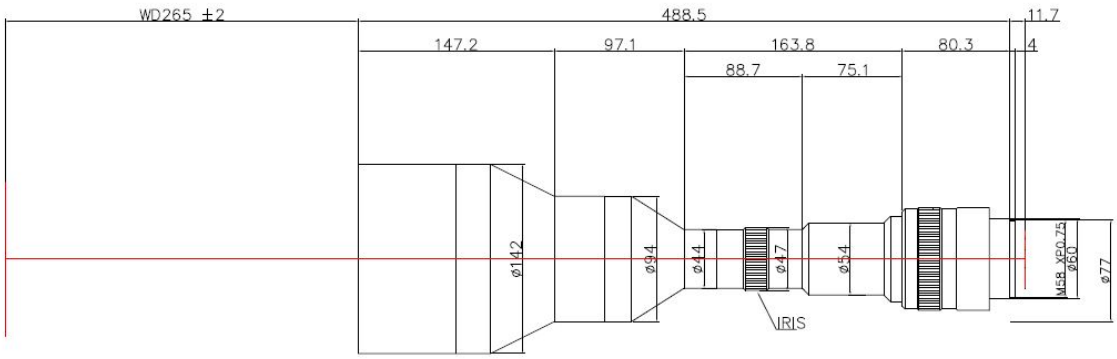

The Double Side Telecentric Lens T29M-038-265I is suitable for sensors up to 29 megapixel and with an image format of 43mm.

Technical Data	
Magnification	0.38 X
Mount Type	M58
Aperture (F)	10
Working Distance (WD)	265
Depth of Field (DOF)	3060 µm
Resolution (Object Side)	17.6 µm
Numerical Aperture (NA)	0.019
Image Format (max.)	43mm
Megapixel	29 MP
Field of View (FOV)	94.73mm x 63.15mm@29M CCD
Telecentric Type	Double Side
Telecentricity	0.05 °
Optical Distortion (max.)	0.04 %
Special Feature	Super High Res

created: 2016-06 Specifications subject to change without notice.