Lensagon **BF9M1422**

LENSATION
smart lenses. smart solutions.

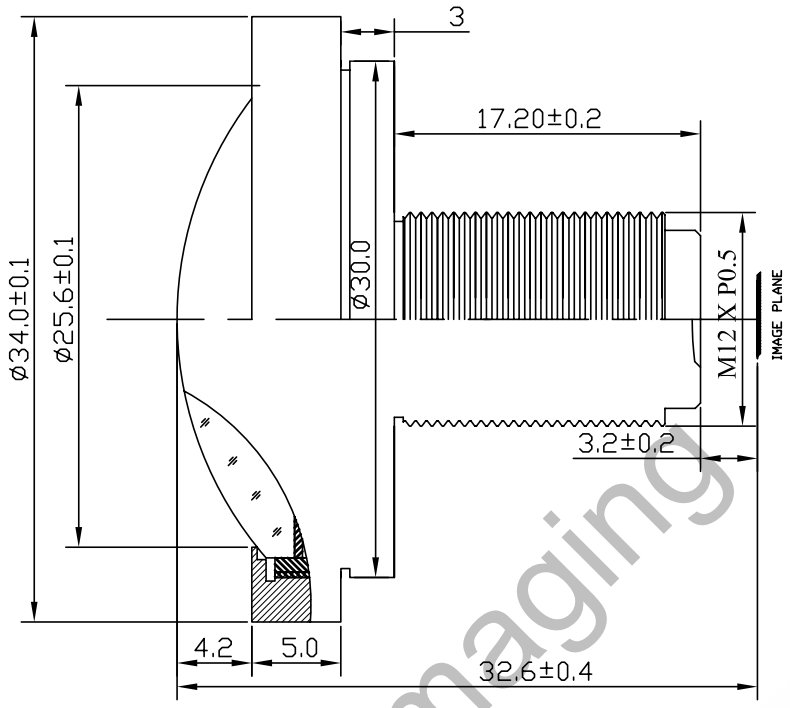

The S-Mount lens Lensagon BF9M1422 is suitable for current sensors up to 9 megapixel with an image format of 1/2.3 inch.
mapping function: equidistant

Technical Data	
Mount	S-Mount
Sensor	1/2.3 inch
Focal Length	1.41 mm
Aperture	2.2
MOD	0.1 m
Back Focal	3.69 mm
Angle of View	D:183° H:183° V:183°
Megapixel	9 MP
IR Cut	corrected
Image Circle	4.5
Iris	fixed
Focus	fixed
Typ	Fisheye

SEDECO IMAGING

Germany, Austria, Switzerland
Sedeco Imaging GmbH
Unterer Dammweg 12
76149 Karlsruhe
Germany
T. +49 721 5604 7980
info@sedeco-imaging.com

BeNeLux
Sedeco Imaging B.V.
Trasmolenlaan 12
3447 GZ Woerden
the Netherlands
T. +31 348 749110
info@sedeco-imaging.nl

www.sedeco-imaging.com

BEST VALUE & PERFORMANCE

9 Megapixel

created: 2016-03 Specifications subject to change without notice.

Sedeco Imaging